PLATINUM
BUSINESS ACADEMY
0777898626

Cambridge International A Level

Cambridge International Examinations
Cambridge International Advanced Level

CANDIDATE NAME	

CENTRE NUMBER						CANDIDATE NUMBER				

7560814163

MATHEMATICS **9709/52**

Paper 5 Mechanics 2 **(M2)** **February/March 2018**

1 hour 15 minutes

Candidates answer on the Question Paper.

Additional Materials: List of Formulae (MF9)

READ THESE INSTRUCTIONS FIRST

Write your Centre number, candidate number and name in the spaces at the top of this page.
Write in dark blue or black pen.
You may use an HB pencil for any diagrams or graphs.
Do not use staples, paper clips, glue or correction fluid.
DO **NOT** WRITE IN ANY BARCODES.

Answer **all** the questions in the space provided. If additional space is required, you should use the lined page at the end of this booklet. The question number(s) must be clearly shown.
Give non-exact numerical answers correct to 3 significant figures, or 1 decimal place in the case of angles in degrees, unless a different level of accuracy is specified in the question.
Where a numerical value for the acceleration due to gravity is needed, use $10\,\text{m}\,\text{s}^{-2}$.
The use of an electronic calculator is expected, where appropriate.
You are reminded of the need for clear presentation in your answers.

At the end of the examination, fasten all your work securely together.
The number of marks is given in brackets [ ] at the end of each question or part question.
The total number of marks for this paper is 50.

This document consists of **15** printed pages and **1** blank page.

© UCLES 2018

PLATINUM
BUSINESS ACADEMY
0777898626

BLANK PAGE

PLATINUM BUSINESS ACADEMY
0777898626

1 A uniform rectangular block has a square base $ABCD$ with $AB = BC = 0.4$ m. The height of the block is h m. The block is placed with its base on a rough plane inclined at 30° to the horizontal. The block does not slide. It is given that the block is on the point of toppling when the diagonal AC lies along a line of greatest slope. Calculate h. [3]

PLATINUM BUSINESS ACADEMY
0777898626

2 An object is projected with speed $15\,\mathrm{m\,s^{-1}}$ at an angle of 35° above the horizontal from a point on horizontal ground. Find the speed and direction of motion of the object at time 2 s after the instant of projection. [5]

PLATINUM BUSINESS ACADEMY
0777898626

3 A small ball B is connected to one end of a light elastic string of natural length 0.4 m and modulus of elasticity 12 N. The other end of the string is attached to a fixed point A. The ball is projected with speed $1\ \mathrm{m\,s^{-1}}$ vertically downwards from a position 0.4 m vertically below A, and reaches its greatest speed at the point 0.7 m below A.

(i) Show that the mass of B is 0.9 kg. [2]

.....

.....

.....

.....

.....

.....

(ii) Calculate the greatest speed of B. [4]

.....

.....

.....

.....

.....

.....

.....

.....

.....

.....

.....

.....

.....

.....

.....

PLATINUM BUSINESS ACADEMY
0777898626

4 A particle P is projected from a point O on horizontal ground. At the instant t s after projection, the horizontal and vertically upwards displacements of P from O are x m and y m respectively. The equation of the trajectory of P is $y = 3x - 0.05x^2$.

(i) Find the angle of projection and the initial speed of P. [3]

.....

.....

.....

.....

.....

.....

.....

.....

.....

.....

.....

.....

.....

.....

(ii) Find the coordinates of P at the instant when OP makes an angle of 45° with the horizontal. [2]

.....

.....

.....

.....

.....

.....

.....

.....

.....

PLATINUM
BUSINESS ACADEMY
0777898626

(iii) For the instant when P is at its greatest height above the ground, calculate this height and the corresponding value of t. [4]

PLATINUM BUSINESS ACADEMY
0777898626

5

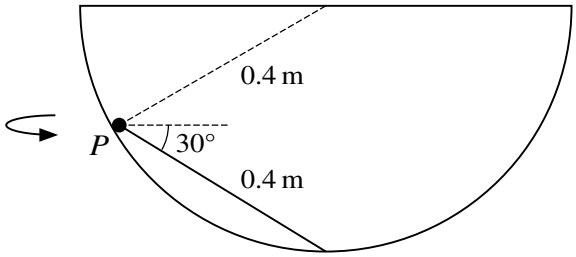

One end of a light inextensible string of length 0.4 m is attached to the lowest point of a hemisphere of radius 0.4 m fixed with its axis vertical. A particle P of mass 0.3 kg is attached to the other end of the string. The string is straight and makes an angle of 30° with the horizontal. P moves on the smooth inner surface of the hemisphere in a horizontal circle (see diagram).

(i) Calculate the smallest possible angular speed of P. [4]

.....

.....

.....

.....

.....

.....

.....

.....

.....

.....

.....

.....

.....

.....

.....

.....

.....

.....

PLATINUM
BUSINESS ACADEMY
0777898626

(ii) Given that the greatest possible tension in the string is 5 N, calculate the greatest possible speed of P. [4]

PLATINUM BUSINESS ACADEMY
0777898626

6

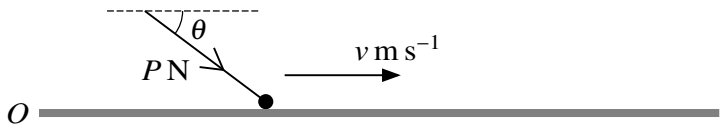

A small object of mass 0.2 kg rests at a point O on a rough horizontal surface. The coefficient of friction between the object and the surface is 0.5. A force of magnitude P N acting at an angle θ below the horizontal is applied to the object. The velocity of the object is $v\,\mathrm{m\,s^{-1}}$ away from O at time t s after the force begins to act (see diagram). It is given that $\tan\theta = \frac{3}{4}$ and that $P = 0.4t$ for $0 \leqslant t \leqslant 8$.

(i) Find the value of t when the object starts to move. [3]

.....

.....

.....

.....

.....

.....

.....

.....

.....

(ii) Show that, when the force is acting and the object is in motion, $\dfrac{\mathrm{d}v}{\mathrm{d}t} = t - 5$. [2]

.....

.....

.....

.....

.....

.....

.....

.....

.....

PLATINUM
BUSINESS ACADEMY
0777898626

When $t = 8$ the force of magnitude P N ceases to act.

(iii) Find the distance travelled by the object after $t = 8$ before it comes to rest. [5]

PLATINUM BUSINESS ACADEMY
0777898626

7

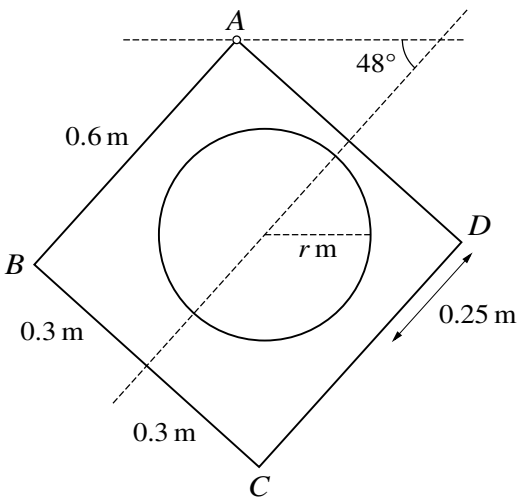

Fig. 1

$ABCD$ is a uniform square lamina with sides of length 0.6 m. A circular hole of radius r m is made in the lamina. The centre of the hole is 0.3 m from AB and 0.25 m from AD. The lamina is freely suspended at A and hangs with the axis of symmetry making an angle of 48° with the horizontal (see Fig. 1).

(i) Show that $r = 0.214$, correct to 3 significant figures. [5]

.....

.....

.....

.....

.....

.....

.....

.....

.....

.....

.....

.....

.....

.....

PLATINUM
BUSINESS ACADEMY
0777898626

PLATINUM
BUSINESS ACADEMY
0777898626

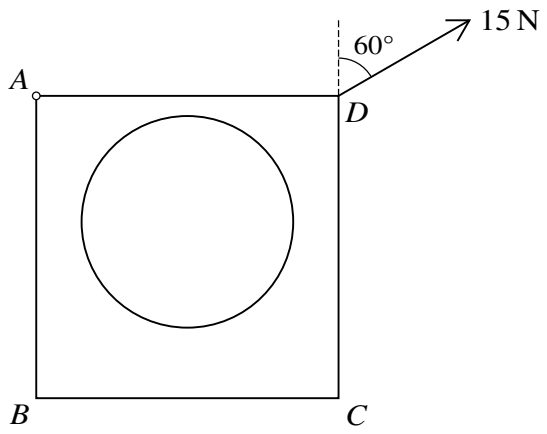

Fig. 2

The lamina is held in equilibrium with AD horizontal by a force of magnitude 15 N acting in the plane of the lamina applied at D. The line of action of this force makes an angle of 60° with the vertical (see Fig. 2).

(ii) Find the weight of the original square lamina, before the hole was made. [4]

.....

.....

.....

.....

.....

.....

.....

.....

.....

.....

.....

.....

.....

.....

.....

PLATINUM
BUSINESS ACADEMY
0777898626

PLATINUM
BUSINESS ACADEMY
0777898626

Additional Page

If you use the following lined page to complete the answer(s) to any question(s), the question number(s) must be clearly shown.

.....

.....

.....

.....

.....

.....

.....

.....

.....

.....

.....

.....

.....

.....

.....

.....

.....

.....

.....

.....

.....

Permission to reproduce items where third-party owned material protected by copyright is included has been sought and cleared where possible. Every reasonable effort has been made by the publisher (UCLES) to trace copyright holders, but if any items requiring clearance have unwittingly been included, the publisher will be pleased to make amends at the earliest possible opportunity.

To avoid the issue of disclosure of answer-related information to candidates, all copyright acknowledgements are reproduced online in the Cambridge International Examinations Copyright Acknowledgements Booklet. This is produced for each series of examinations and is freely available to download at www.cie.org.uk after the live examination series.

Cambridge International Examinations is part of the Cambridge Assessment Group. Cambridge Assessment is the brand name of University of Cambridge Local Examinations Syndicate (UCLES), which is itself a department of the University of Cambridge.

© UCLES 2018